Nucl Instr Meth A, vol. 422, pp. 111-118, 1999

Prospects for First-Principle Calculations of Scintillator Properties[1]

Stephen E. Derenzo* and Marvin J. Weber

Lawrence Berkeley National Laboratory, University of California, Berkeley, California

Abstract

Several scintillation processes can be modeled from first principles using quantum chemistry cluster calculations and recently available high-performance computers. These processes include the formation of excitons and trapping centers, the diffusion of ionization energy (electrons and holes) through a host crystal, and the efficient capture of these carriers by an activator atom to form a luminous, non-quenched excited state. As examples of such calculations, results are presented for (1) hole transport in the known scintillator host crystal CsI, (2) hole trapping in the non-scintillator PbF_2, (3) hole transport in the experimentally unexplored PbF_4, and (4) the electronic nature of excited states of CsI:Tl and CsI:Na.

[1]This work was supported in part by the U.S. Department of Energy under Contract No. DE-AC03-76SF00098 and in part by U.S. Public Health Service Grant R01-CA48002.

PACS categories
29.40.Mc Scintillation detectors
31.15.Ar Ab-initio calculations (in atomic and molecular physics)
61.72.Bb Theories and models of crystal defects
82.20.Rp Energy distribution and transfer; relaxation

Keywords
scintillation
modeling
hole transport
ab-initio
self-trapped holes

*Corresponding Author:
Stephen E. Derenzo
Mail Stop 55-121
Lawrence Berkeley National Laboratory
1 Cyclotron Road
Berkeley, CA 94720
510-486-4097 (voice)
510-486-4768 (fax)
sederenzo@lbl.gov

1. Introduction

Dense, inorganic scintillation crystals are important for the efficient detection of gamma radiation in nuclear medicine, nuclear physics, high-energy physics, and other fields. In these crystals, interacting gamma rays produce recoil electrons that leave excited states along their tracks. These excited states then produce photons as they return to the ground state, and the photons can be converted into a useful electrical signal using photomultiplier tubes or solid-state photodetectors.

There are three main classes of inorganic scintillation crystals:

- Activated scintillators, such as NaI:Tl, CsI:Na, CaF_2:Eu, and Lu_2SiO_5:Ce, where the ionizing energy diffuses through the host crystal and produces an excited state at or near an activator atom that is present in low concentration (typically ≈0.1%).
- Self-activated scintillators, such as CsI, NaI, $Bi_4Ge_3O_{12}$, CeF_3, BaF_2, and $PbWO_4$, where the activator atoms are a major constituent of the crystal and/or excitonic processes are involved.
- Core-valence luminescence scintillators, such as BaF_2, CsF, and $RbCaF_3$, where the ionizing radiation produces an electron vacancy in an upper core level of one atom and the vacancy is promptly (≈ 1 ns) filled with an electron from the valence band of another atom to produce light. (Note that BaF_2 has both core-valence and self-activated fluorescence processes.)

For recent developments and reviews of the literature on scintillators and scintillation processes, see references [1-4].

In the past, many useful new scintillators were discovered by knowledge of the luminescence literature [5] and a certain amount of intuition and luck. However, an area of critical importance for scintillators is the transfer of ionization energy to the luminescent site, a process specific to excitation by ionizing radiation, and one of the least understood [1]. In this work we investigate whether available quantum chemistry software and high performance computers can be used to model these energy transfer processes well enough to help guide the experimental search for new scintillators.

We have focused our computational efforts on the activated scintillators, rather than self-activated or core-valence scintillators, because we believe that the former provide the best opportunity to tailor new scintillators with good density, luminosity, and speed. The most luminous room-temperature scintillators are activated materials—NaI:Tl, CsI:Tl, CsI:Na, CaF_2:Eu, and Lu_2SiO_5:Ce all have luminosities greater than 20,000 photons/MeV. Whereas a number of self-activated scintillators are important, they generally have lower luminosities. Core-valence scintillators also have lower luminosities (<2,000 photons/MeV) due to the small number of core vacancies produced in the ionization process, and are rare because in most crystals the valence-core band energy difference is greater than the band gap, and hence Auger electrons are produced instead.

2. Processes in Activated Inorganic Scintillation Crystals

The scintillation process in activated ionic crystals can be described in several steps [4]**:**

Step 1- Ionization

Ionization occurs in all crystals, and the average energy needed to produce a electron-hole pair is approximately three times the energy gap of the material. The number of electron-hole pairs produced by ionizing radiation does not show large, order-of-magnitude variations for different materials and thus is not a controlling factor in determining whether a crystal is a scintillator.

Step 2- Relaxation of Electrons and Holes

The electrons and the vacancies (holes) resulting from the ionization process form separated charge defects that cause the surrounding atoms to rearrange themselves (relax). In ionic crystals, this relaxation energy is on the order of 1 eV. In many alkali halide crystals, the self-trapped hole takes the form of a V_k center, where two halogen atoms share the hole by pulling together and forming a covalent bond [6].

Step 3- Carrier Diffusion

In large band gap ionic crystals, the valance bands are filled and an excess electron is spatially diffuse in an essentially empty conduction band. Because the electron occupies a space that includes many atoms, the lattice binding energy is a weak function of the electron position and the energy barrier to electron diffusion is usually small.

On the other hand, holes are generally localized and will only diffuse at room temperature if thermal vibrations are able to move the hole from one trapping site to another. In most crystals, this is not possible because the energy barrier to such diffusion is too large.

If the self-trapped hole takes the form of a V_k center, the breaking of the covalent bond is an energy barrier for hole transport that retards their diffusion. Since this process limits the rate of formation of excited states, activated scintillators whose holes form V_k centers (such as NaI:Tl, CsI:Tl, and CsI:Na) have slow risetimes (≈ 10 ns) at room temperature. The existence of other activated crystals with faster risetimes, such as Lu_2SiO_5:Ce which has a risetime of about 0.1 ns, are indicative of much faster hole diffusion.

Step 4- Sequential Capture

The concentration of electrons and holes is much lower than the concentration of activator atoms. Therefore if both carriers (electrons and holes) have large probabilities for capture by activator atoms, they will generally be captured by different activator atoms and will not be able to get together to form the desired excited states. Thus it is therefore important that the activator atom first captures only one carrier, and then captures the other carrier. The result may be an excited electronic state of the activator atom, or an exciton (hole surrounded by a diffuse electron) trapped near the activator atom.

Step 5- Radiative Emission

Much is known from photoluminescence studies about the excited-state emission process and competing nonradiative processes of activated crystals [5]. Thermal quenching is a common nonradiative process at room temperature and occurs if thermal vibrations can deform the atomic

configuration of the excited state to that of a vibrational mode of the ground state. These processes can be readily measured experimentally as a function of temperature.

3. Computational Techniques

To investigate scintillation processes, the crystal is modeled by a central cluster of atoms (constructed using only unit cell information) imbedded in a lattice of point charges chosen to provide the same electrostatic ionic field as in the infinite crystal. Solving the Schrödinger equation for the system of atoms and point charges determines the energy of the system and the probability distribution of the electrons. In practice, heavy atoms—desired in gamma ray detectors—are modeled by effective core potentials (that include the relativistic effects experienced by the inner electrons) surrounded by valence electrons. This reduces the computational labor because the Schrödinger equation is solved only for the non-relativistic valence electrons. The first level of theory is the Hartree-Fock (HF) method, which minimizes the energy by varying the molecular orbitals of the individual electrons one at a time (assuming at each step that the others are frozen). The molecular orbitals are linear combinations of Gaussian basis functions selected by the user. In a subsequent step, second-order Møller-Plesset (MP2) corrections can be performed on the Hartree-Fock molecular orbitals to determine an energy correction that partly accounts for electron motion correlation.

In this work, we used the Gaussian 94 program, a product of Gaussian, Inc., Pittsburgh, PA [7, 8]. The LanL2DZ basis set and relativistic effective core potentials (provided by the Los Alamos National Laboratory as a standard feature of Gaussian 94) were used. Atomic relaxation was performed using the numerical Fletcher-Powell method because the more efficient analytic methods are disabled in Gaussian 94 when including point charges. Atomic charges and electron populations were determined from the Natural Population Analysis (NPA) phase of the Natural Bond Orbital (NBO) analysis [9]. The Gaussian 94 runs were performed on Silicon Graphics, Inc. computers with a total of six R10000 processors, and on a Cray J-90 at the U.S. Department of Energy National Energy Research Supercomputer Center at the Lawrence Berkeley National Laboratory.

4. First-Principle Modeling of Hole Trapping and Diffusion in a Pure Crystal

In the neutral ground-state crystal, the above calculation should produce a minimum energy when the atoms are in their normal lattice positions. However, when an electron is abruptly removed in an ionization event, neither the electronic nor the atomic configurations are at a minimum energy. To find the minimum energy configuration for a hole, the electronic wavefunction is assumed to find its minimum energy in a time that is short compared to the motion of the atoms (Born-Oppenheimer approximation). The atomic coordinates are then varied to minimize the energy; at each value of the atomic coordinates the Schrödinger equation is solved to determine the electron wavefunction and the energy of the system. The result is the relaxed electronic and atomic configuration that results after the removal of an electron (the self-trapped

hole). In the example in the next section, we describe calculations that model the formation of a self-trapped hole in CsI.

To determine if the hole can move in the host crystal, a cluster of atoms is used that is large enough to model a self-trapped hole at two equivalent locations. If it can be shown that the hole can move between these locations, then the hole can move to a third equivalent site and so diffuse throughout the host crystal. After determining the atomic configuration for a self-trapped hole on those two locations, the atomic configuration space is searched to find the minimum energy path between the two minima. The saddle point between them is the energy barrier for hole diffusion. If this energy barrier less than kT (0.025 eV at room temperature), holes diffuse readily; if the energy barrier is very much greater than kT, the holes are not able to diffuse.

5. Examples of First-Principle Calculations of Hole Trapping and Diffusion

Hole Transport in CsI

It is known that the self-trapped hole in CsI consists of two bound I atoms (the V_k center I_2^-) aligned along the 100 axis of the body-centered cubic lattice. Figure 1 shows a 45-atom $Cs_{16}I_{29}$ cluster that is large enough to have a self-trapped hole on two sites: I_2-I_3 or I_3-I_4. For the calculation, this cluster was imbedded in an array of 5787 point charges. Figure 2 shows the energy at the HF and MP2 level of theory as a function of the x coordinate of the atom I_3 [10]. At each value of x_{I3}, the x coordinates of I_2 and I_3, and the x and radial coordinates of Cs_1-Cs_4 and Cs_5-Cs_8 were varied to minimize the energy. Each of these six-parameter optimizations took about 300 hours of R10000 processor time. The two stable configurations at x_{I3} = –0.5 Å and +0.5 Å are V_k centers at the I_2-I_3 and I_3-I_4 sites, respectively, where the distance between the two I atoms forming the hole has been reduced from 4.5Å to 3.5Å. The configuration at x_{I3} = 0 is a metastable one-atom hole on I that represents an energy barrier for hole transport of about 0.15 eV. This is in fair agreement with the experimental value of 0.23 eV, determined from the risetime of the CsI:Tl scintillation as a function of temperature from –60 to +50 °C [11]. It is anticipated that use of a larger cluster and a more complete state of relaxation involving more nearby atoms would increase the value of the calculated energy barrier and result in an even better agreement with experiment.

Hole Trapping in PbF_2

Lead fluoride has the cubic calcite lattice structure. Using a Pb_8F_{16} cluster imbedded in 6120 point charges to model the PbF_2 crystal, the calculation shows that the hole is centered on a single Pb atom, where about one half an electron charge is missing from the Pb and a total of one half an electron charge is missing from the 8 nearest neighbor F atoms. This situation differs significantly from the two-atom V_k center found in alkali halide crystals. The hole can be shifted to one of the 12 nearest neighbor Pb atoms by the displacement of the two F atoms between them. This is understandable, because when the two F atoms are moved toward a nearest Pb, it becomes energetically favorable for that Pb atom to have the extra positive charge. If the energy of the

system is minimized by relaxing these four atoms, the F-F distance is reduced from 2.97 Å to 2.63 Å, and the F-Pb distance is reduced from 2.57 Å to 2.11 Å. The energy necessary to shift this self-trapped hole to a neighboring Pb atom by moving the two F atoms between them is 1.0 eV (Figure 3), much higher than the thermal vibration energy. A more complete calculation would relax more than four atoms and result in a larger hole trapping energy. It is therefore unlikely that the addition of any activator atom to PbF_2 will produce a luminous scintillator because of the strong hole trapping on Pb. While photoluminescence has been observed from several activator atoms in PbF_2 crystal, scintillation has not [12].

Hole Transport in PbF_4

The PbF_4 crystal has a tetragonal lattice structure consisting of alternating planes, one containing Pb and F atoms (stoichiometrically PbF_2) and one containing only F atoms. The F sites in the two planes are not equivalent and the F atoms in the fluorine-only plane are more weakly bound than those in the PbF_2 plane. Using a Pb_7F_{34} cluster imbedded in 8599 point charges to model the PbF_4 crystal, the calculation shows that the hole is localized on a single F atom in the fluorine-only plane.

Figure 4 shows the minimum energy (adiabatic) path of the Pb_7F_{34} cluster (with a missing electron) as a function of the distance of a particular Pb atom from the fluorine-only plane. At the distance 2.23 Å, the self-trapped hole is on the F atom in the fluorine-only plane nearest the Pb. This is understandable, since when a Pb atom is moved away from its nearest F atom (F3) in the fluorine-only plane, it becomes energetically favorable for that F atom to become neutral. (Note that the roles of the Pb and F are reversed relative to that of the PbF_2 case described above.) At the distance 2.05 Å, the self trapped hole has moved to the next nearest F atom (F2) in the fluorine-only plane. The coordinates of two Pb and three F nearby atoms are relaxed at each plotted point and the curves in Figure 4 represent the adiabatic path between the two self-trapped hole sites. The difference in the two curves is due to the limited size of the cluster used and the resulting asymmetry. The curve in Figure 4 shows that the energy barrier for the shift of a relaxed hole from one F atom to a nearest neighbor F atom is only about 0.2 eV. Since this is similar to the barrier in CsI, it is possible that PbF_4 could be a bright scintillator if activated.

6. First-Principle Calculations of the Sequential Capture of Electrons and Holes

To determine whether an activator atom can capture an excess electron, the Schrödinger equation is solved to determine the electron affinity of the host crystal (energy of the ground state minus the energy with an excess electron), and the corresponding electron affinity of the host crystal with an activator atom. The electron will be captured by an activator atom if its electron affinity is greater. Similar calculations can be done to determine whether a hole in the host crystal will be captured by an activator atom.

After capturing an electron and a hole, the resulting excited state may be modeled by calculating the cluster as a neutral triplet system. By putting two electrons in a parallel spin (triplet) state, one

of the electrons is forced into the lowest electronic excited state. The population analysis can be used to determine the electronic nature of the excited state.

Electronic Nature of the Excited State of CsI:Tl

A $TlCs_{13}I_{14}$ cluster imbedded in 5804 point charges was used to compute the ground (singlet) and excited (triplet) states with all atoms in their normal lattice positions [10]. Diffuse s and d basis functions were added to the standard Los Alamos basis set to describe the excited electron properly. The energy of the excited state is 5.0 eV above that of the ground state, close to that of the absorption edge of 4.5 eV. The Tl ion has a charge of +0.33 in the ground state and +0.18 in the excited state. All Cs and I ions have their normal charges in both the ground and excited states. The outer Tl orbital population for the ground state is 6s(2.00), 6p(0.66), 7p(0.01) and for the excited state is 6s(1.21), 6p(1.34), 7p(0.28). The main difference between the ground state and the excited state of CsI:Tl is that the Tl atom has lost 0.79 electrons from the 6s orbital and gained 0.95 electrons in the 6p and 7p orbitals. Therefore in this unrelaxed excited state model the excitation is localized on a single Tl atom.

There is good evidence from paramagnetic resonance experiments, however, that the relaxed excited state is a Tl-bound exciton [13]. Moreover, the two intense luminescence bands of CsI:Tl have been attributed to two different configurations of a self-trapped exciton perturbed by a Tl^+ ion [14]. These systems should result from modeling the excited state of a larger cluster of atoms and a more complete relaxation of the central region.

Electronic Nature of the Excited State of CsI:Na

Similar calculations were performed as above but with a $NaCs_{13}I_{14}$ cluster [10]. The energy of the excited state is 5.2 eV above that of the ground state. The Na ion has a charge of +0.77 in the ground state and +0.76 in the excited state. Two I ions near the Na ion have charges of –0.98 in the ground state and –0.45 in the excited state. Relaxing these two I ions from the normal distance of 2.28 Å to 1.83 Å reduces the excited state energy to 5.1 eV. The Na outer orbital population is 3s(0.22) in the ground state and essentially the same for the excited state - 3s(0.21), 3p(0.01), 4s(0.01). Compared with the ground state, all the other Cs and I ions have an additional electron distributed among their outer orbitals.

This calculation describes the excited state of CsI:Na as a hole (V_k center) near the Na atom plus an electron in the higher orbitals of the nearby atoms, effectively a defect-trapped exciton. The Na atom is not directly involved in the excitation. However, the Na atom appears to bind the exciton energetically because the excited state minus ground state energy of the CsI:Na cluster is 0.63 eV below the excited state minus ground state energy of the CsI cluster.

7. Conclusions and Discussion

In this work, we have modeled the formation of the V_k center and the energy barrier for hole transport in CsI. The calculations for CsI clusters containing Tl and Na show that the unrelaxed excited state of CsI:Tl is an electronically excited Tl atom in a ground state CsI crystal and the excited state of CsI:Na is an exciton trapped by a ground-state Na atom.

By determining that the hole in PbF_2 is trapped on a Pb site with an energy barrier > 1 eV, we can explain why efforts to activate PbF_2 have been unsuccessful [12]. However, the calculations also predict that in PbF_4, holes have an energy barrier similar to that of CsI and may have a similar mobility. This crystal, and other crystals with Pb in the +4 valence state and with planes containing only anions could be potential host crystals for new Pb-compound scintillators. Examples of such compounds are of the form A_2PbF_6, A_2PbO_3, $BPbF_6$ and $BPbO_3$, where A is a monovalent atom and B is a divalent atom. Additional work will be necessary to identify appropriate activator atoms for these Pb(IV) compounds.

8. Future Directions

To guide the search for new heavy, fast, bright scintillators computationally, the following tasks remain:

- Identify dense host crystals in which electrons and holes diffuse rapidly at room temperature. This involves applying the methods described above to a large number of scintillators whose unit cell information has been taken from crystal structure databases.
- Identify activator atoms that rapidly and efficiently capture electrons and holes. This involves calculating energies and electronic configurations for clusters containing a variety of impurity atoms in on-center and off-center lattice sites.
- Identify activator atoms that when excited, are not thermally quenched. To model the thermal quenching process, vibrational analyses are performed on the excited and the ground states of a cluster with an activator atom to determine the normal modes of vibration and the amplitude of those modes as a function of temperature. If the excited state at room temperature can have the same atomic configuration as a ground state vibrational mode, then the system can convert to the ground state and loose its excitation energy to lattice vibrations (phonons).
- Identify activator atoms that when excited, rapidly radiate scintillation photons. Although Ce and Nd have short 5d–4f decay times (10-40 ns), singlet excitons have even shorter decay times (1-2 ns) [6]. Singlet-triplet mixing is required for the initial triplet state to radiate rapidly via singlet emission.
- For all of the above, it is important to determine the minimum (1) number of basis functions, (2) number of atoms in the cluster, (3) number of atoms relaxed, and (4) level of the theory necessary for reliable results.

We anticipate that increased computing power and more efficient software will be available in the future to make these tasks possible.

9. Acknowledgments

We thank W. Moses, M. Berrondo, R. Deych, E. Heifets , F. Rivas-Silva, and K. Song for helpful discussions, and D. Fox for helpful suggestions on the use of Gaussian 94.

This work was supported in part by the Director, Office of Energy Research, Office of Biological and Environmental Research, Medical Applications and Biophysical Research Division of the U.S. Department of Energy under contract No. DE-AC03-76SF00098, in part by the U.S. Department of Energy National Energy Research Supercomputer Center, and in part by the National Institutes of Health, National Cancer Institute under grant No. R01-CA48002. Reference to a company or product name does not imply approval or recommendation by the University of California or the U.S. Department of Energy to the exclusion of others that may be suitable.

10. References

[1] G. Blasse, “Scintillator Materials,” Chem Matter, 6 (1994) 1465-1475.

[2] SCINT95, “Inorganic Scintillators and Their Applications,” Delft University Press (ISBN 90-407-1215-8), Delft, 1995.

[3] SCINT97, “Inorganic Scintillators and Their Applications,” Chinese Academy of Sciences, Shanghai Branch Press, Shanghai, 1997.

[4] P. A. Rodnyi, “Physical Processes in Inorganic Scintillators,” CRC Press (ISBN 0-8493-3788-7), Boca Raton, FL, 1997.

[5] G. Blasse and B. C. Grabmaier, “Luminescent Materials,” Springer-Verlag (ISBN 0-387-58019-0), New York, 1994.

[6] K. S. Song and R. T. Williams, “Self-Trapped Excitons,” Springer-Verlag (ISBN 0-387-55906-X), New York, 1993.

[7] M. J. Frisch, G. W. Trucks, H. B. Schlegel, P. M. W. Gill, B. G. Johnson, M. A. Robb, J. R. Cheeseman, et al., “Gaussian 94 (Revision D.3),” Pittsburgh PA, 1995.

[8] Examples of other commercial ab-initio quantum chemistry software are QChem, a product of QChem, Inc., Export , PA, and Jaguar, a product of Schroedinger, Inc., Portland, OR.

[9] E. D. Glendening, A. E. Reed, J. E. Carpenter and F. Weinhold, “NBO Version 3.1,” 1995.

[10] S. E. Derenzo and M. J. Weber, “Ab-initio cluster calculations of hole transport and activator excitation in CsI:Tl and CsI:Na,” IEEE Nuclear Science Symposium Conference Record (CD-ROM), (1997)

[11] J. D. Valentine, W. W. Moses, S. E. Derenzo, D. K. Wehe and G. F. Knoll, “Temperature dependence of CsI(Tl) gamma-ray scintillation decay time constants and emission spectrum,” Nucl Instr Meth, A325 (1993) 147-157.

[12] D. F. Anderson, J. A. Kierstead, P. Lecoq, S. Stoll and C. L. Woody, “A search for scintillation in doped and orthorhombic lead fluoride,” Nucl Instr Meth, A 342 (1994) 473-476.

[13] J. M. Spaeth, W. Meise and K. S. Song, “The nature of the x-ray-induced luminescence and the hole centres on CsI:Tl studied by optically detected electron paramagnetic resonance,” J Phys: Condens Matter, 6 (1994) 3999-4008.

[14] V. Nagirnyi, S. Zazubovich, V. Zepelin, M. Nikl and G. P. Pazzi, “A new model for the visible emission of the CsI:Tl crystal,” Chem Phys Lett, 227 (1994) 533.

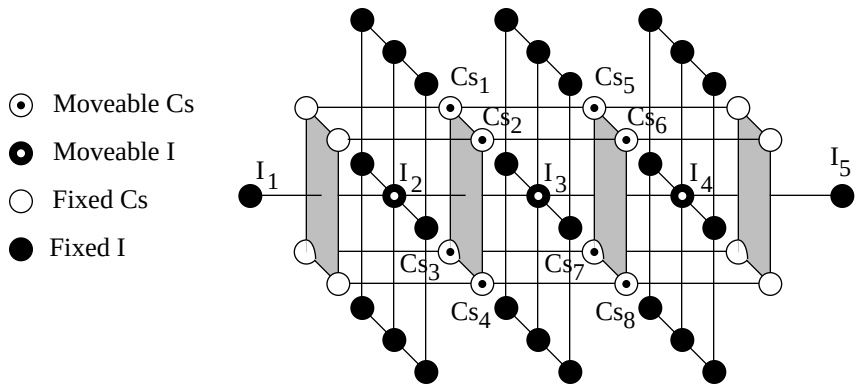

Figure 1. $Cs_{16}I_{29}$ cluster used to model hole formation and transport in CsI.

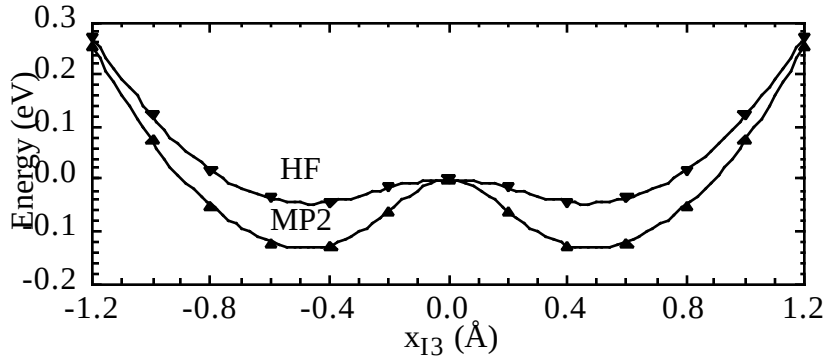

Figure 2. Adiabatic energy path at the HF and MP2 levels of theory as the x coordinate of I_3 is varied in a $Cs_{16}I_{29}$ cluster used to model CsI**.**

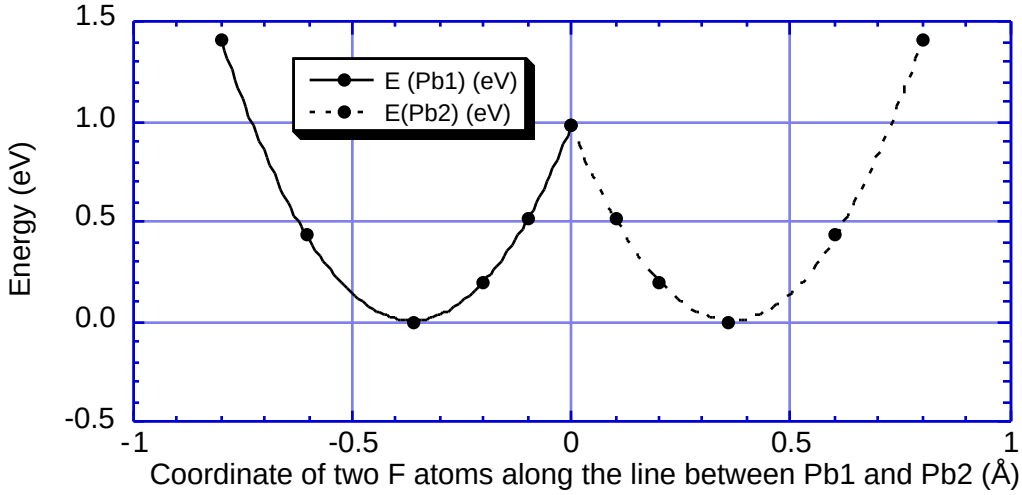

Figure 3 Adiabatic energy path of the Pb_8F_{16} cluster (used to model PbF_2) with a missing electron as a function of the coordinate of two F atoms along the line between two nearest neighbor atoms Pb1 and Pb2. The solid line is for a hole centered on Pb1; the dashed line is for a hole centered on Pb2. Three parameters are varied to relax the coordinates of two Pb and two F atoms at each plotted point.

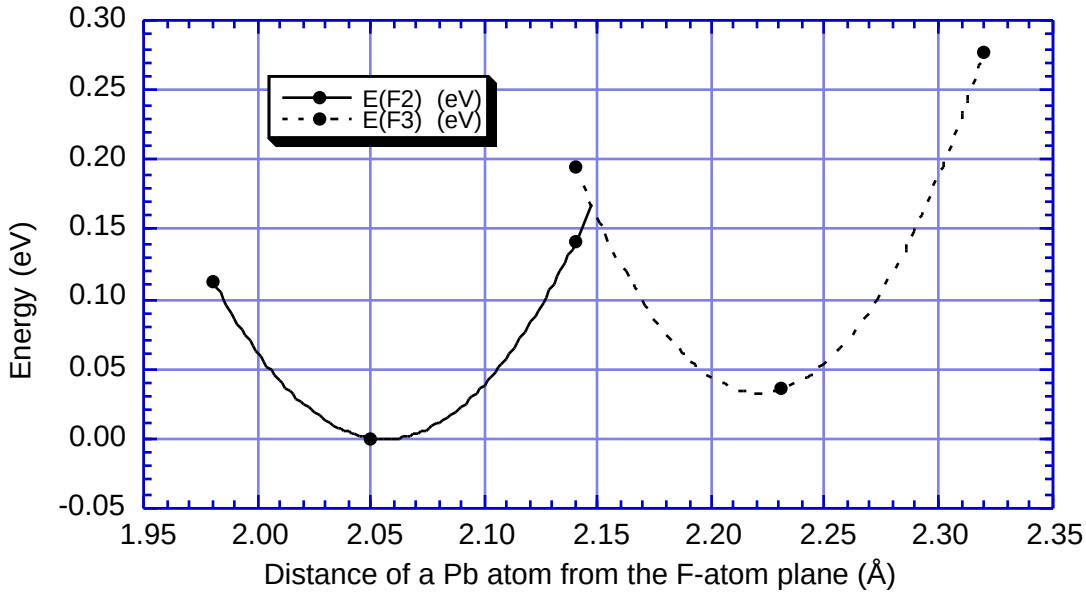

Figure 4 Adiabatic energy path of the cluster Pb_7F_{34} (used to model PbF_4) with a missing electron as a function of the distance of a particular Pb atom from the fluorine-only plane. The solid line is for the hole on F atom (F2), the dashed line is for the hole on a nearest neighbor F atom (F3). Five parameters are varied to relax the coordinates of three Pb and two F atoms at each plotted point.